ROSNOL®
RF/Microwave Interconnect

Technical Data Sheet

Adaptor plug/plug
N plug (male) / N plug (male)

AD-N1N15A/144-144

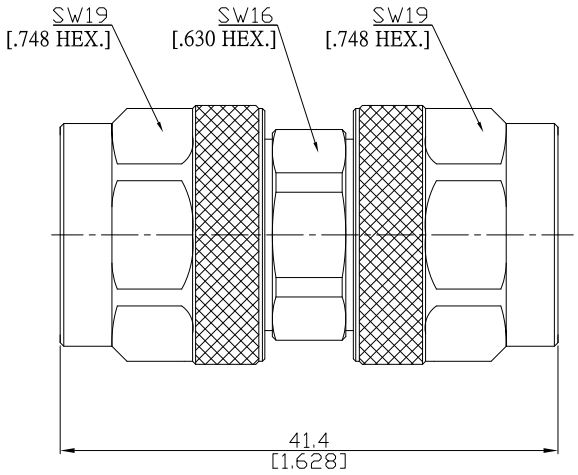

All dimensions are in mm [inch]
Tolerances according to DIN ISO 2768-mH

Interface

According to	MIL-C-39012;MIL-STD-348A/304

Electrical Data

Impedance	50 Ω
Frequency	DC to 11 GHz
VSWR (Return Loss)	≤ 1.15 (≥ 23.12 dB)
Insertion Loss	≤ 0.05 x $\sqrt{F\ (GHz)}$ dB

Mechanical Data

Coupling mechanisms	Screw-lock
Weight	0.0569 kg

Environmental Data

Temperature range	-65°C to +165°C
RoHS	compliant

Material And Plating

Piece Parts (N)	Material	Plating
Centre contact	Brass	Gold plating(Nickel underplated)
Body	Brass	Copper-Tin-Zinc Alloy
Insulator	PTFE	
Gasket	Silicone Rubber	
Coupling nut	Brass	Copper-Tin-Zinc Alloy

Piece Parts (N)	Material	Plating
Centre contact	Brass	Gold plating(Nickel underplated)
Body	Brass	Copper-Tin-Zinc Alloy
Insulator	PTFE	
Gasket	Silicone Rubber	
Coupling nut	Brass	Copper-Tin-Zinc Alloy

Packing

Single or 100

The facts and figures herein are carefully compiled to the best of our knowledge, but they are intended for general informational purposes only. In the effort to improve our products, we reserve the right to make changes judged to be necessary.

Rev.:-
Date: 19/11/10

Rosnol RF/Microwave Technology
www.rosnol.com; info@rosnol.com
Phone: +886-3-463-5095
Fax: +886-3-463-5952