N8105B-D179	**N Jack Crimp For Bulkhead** **75Ω**

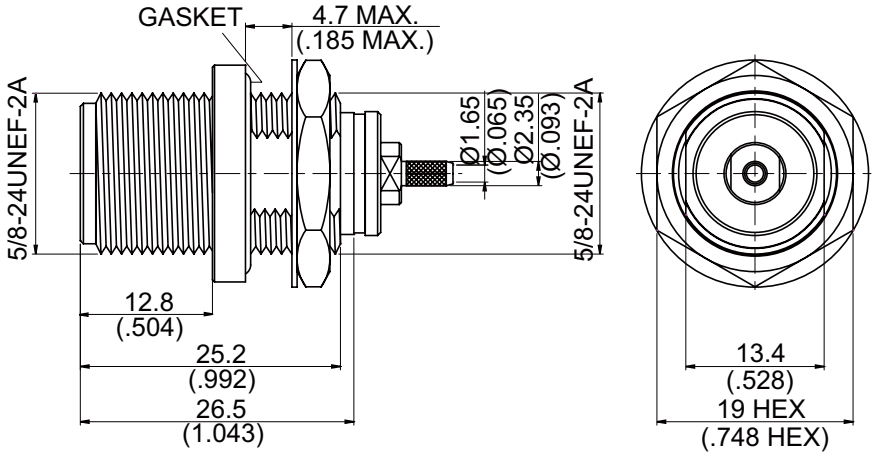

MOUNTING HOLE:

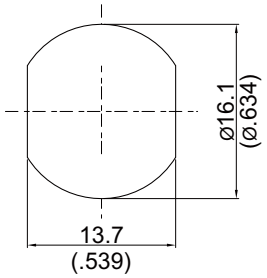

Parts	Material	Plating (Micro-inch)
Nut	Brass	Tin-Zinc-Copper-Alloy 100 Over Copper 50
Washer	Brass	Tin-Zinc-Copper-Alloy 100 Over Copper 50
Gasket	Silicon	
Ferrule	Brass	Tin-Zinc-Copper-Alloy 100 Over Copper 50
Crimp Nut	Brass	Tin-Zinc-Copper-Alloy 100 Over Copper 50
Contact Pin	Phosphor Bronze	Gold 5 Over Copper 50 Over Copper 50
Insulator	Teflon	
Body	Brass	Tin-Zinc-Copper-Alloy 100 Over Copper 50

Weight: Suitable Cables: RG179, RG179-FEP	IP67(Mated)

This part number complies with RoHS.

Notice: JYEBAO reserves the right to make modifications deemed appropriate.

CABLE ASSEMBLY INSTRUCTION

N8105B-D179	JYE BAO CO., LTD.

N8105B-D179	DATE	2014/04/29	REV	—

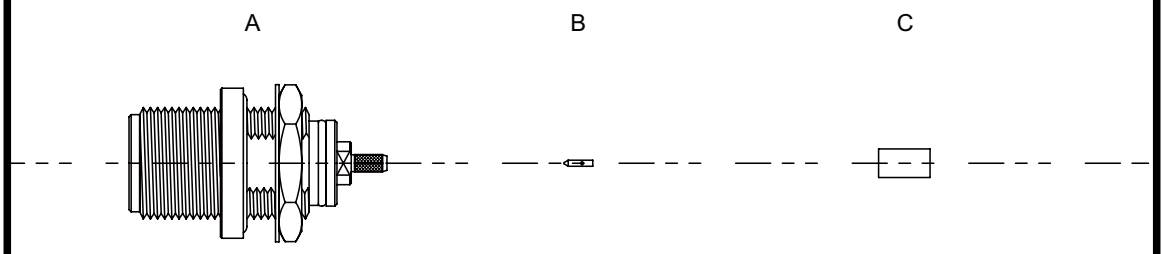

BODY + LOCK WASHER + GASKET + HEX NUT

CONTACT PIN

FERRULE

DIAGRAM	ASSEMBLY INSTRUCTION
	Step 1: STRIP AS SHOWN.
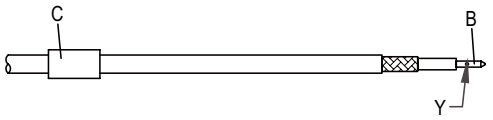	Step 2: SLIDE FERRULE " C " OVER CABLE. Step 3: PUT PIN " B " ON CENTER CONDUCTOR AND SOLDER OR CRIMP IN " Y ". (USE SQUARE 0.7mm/0.028inch SECTION OF INSERT-A IF CRIMPED)
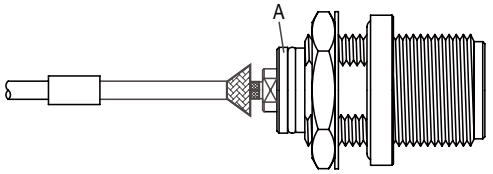	Step 4: LOOSEN BRAIDING AND SLIDE CONNECTOR " A " IN PLACE.
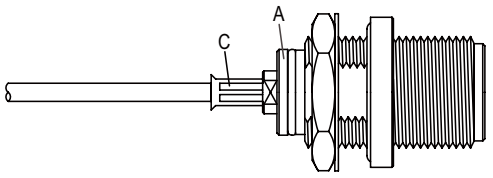	Step 5: SLIDE FERRULE " C " TOWARDS THE CONNECTOR " A " AND CRIMP. (USE 3.3mm/0.130inch HEX SECTION OF INSERT-A)

This part number complies with RoHS.

Notice: JYEBAO reserves the right to make modifications deemed appropriate.