LTE MIMO Combination Antenna

90-ANT-7055



Dimensions

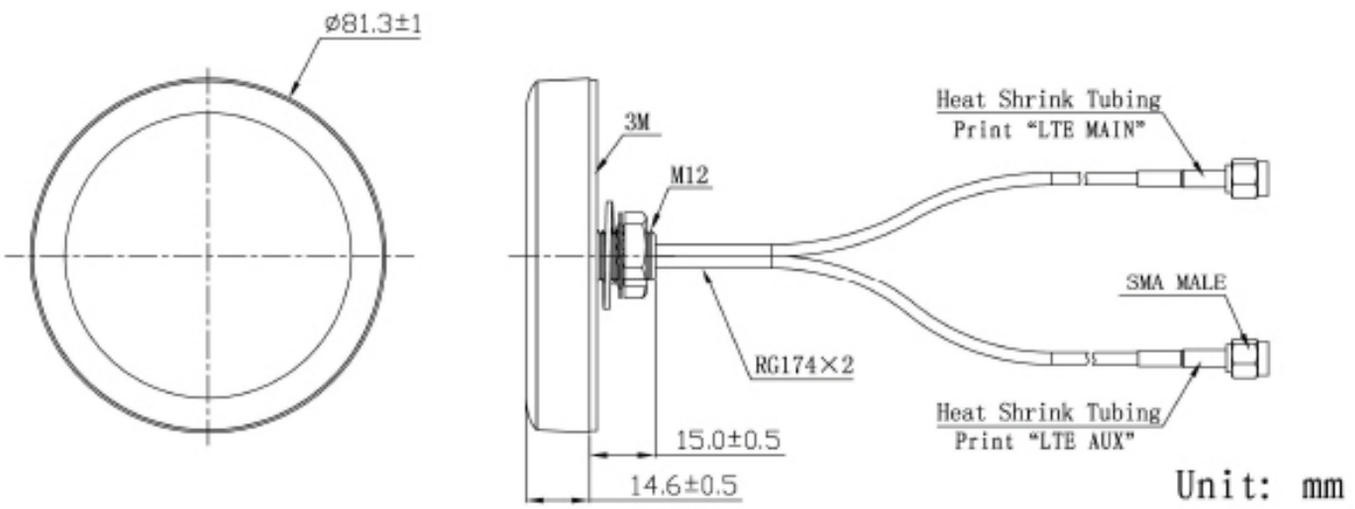

LTE MIMO Combination Antenna

90-ANT-7055

Specifications

Item		Specifications
LTE Antenna MAIN	Frequency Range	698~960MHz/1710~2690MHz
	V.S.W.R	＜3.0
	Polarization	Linear
	Gain	2.5dBi（Zenith）
	Impendance	50Ω
LTE Antenna AUX	Frequency Range	698~960MHz/1710~2690MHz
	V.S.W.R	＜3.0
	Polarization	Linear
	Gain	2.0dBi（Zenith）
	Impendance	50Ω
Mechanical	Cable	RG174
	Connector	SMA or others
	Material	ABS
	Mounting Method	Screw
Environmental	Operating Temperature	-40℃~+85℃
	Relative Humidity	Up to 95%
	Ingress Protection	IP67(exclude cable outlet)
	Vibration	10 to 55Hz with 1.5mm amplitude 2hours
	Environmentally Friendly	ROHS Compliant

LTE MIMO Combination Antenna

90-ANT-7055

Radiation Pattern

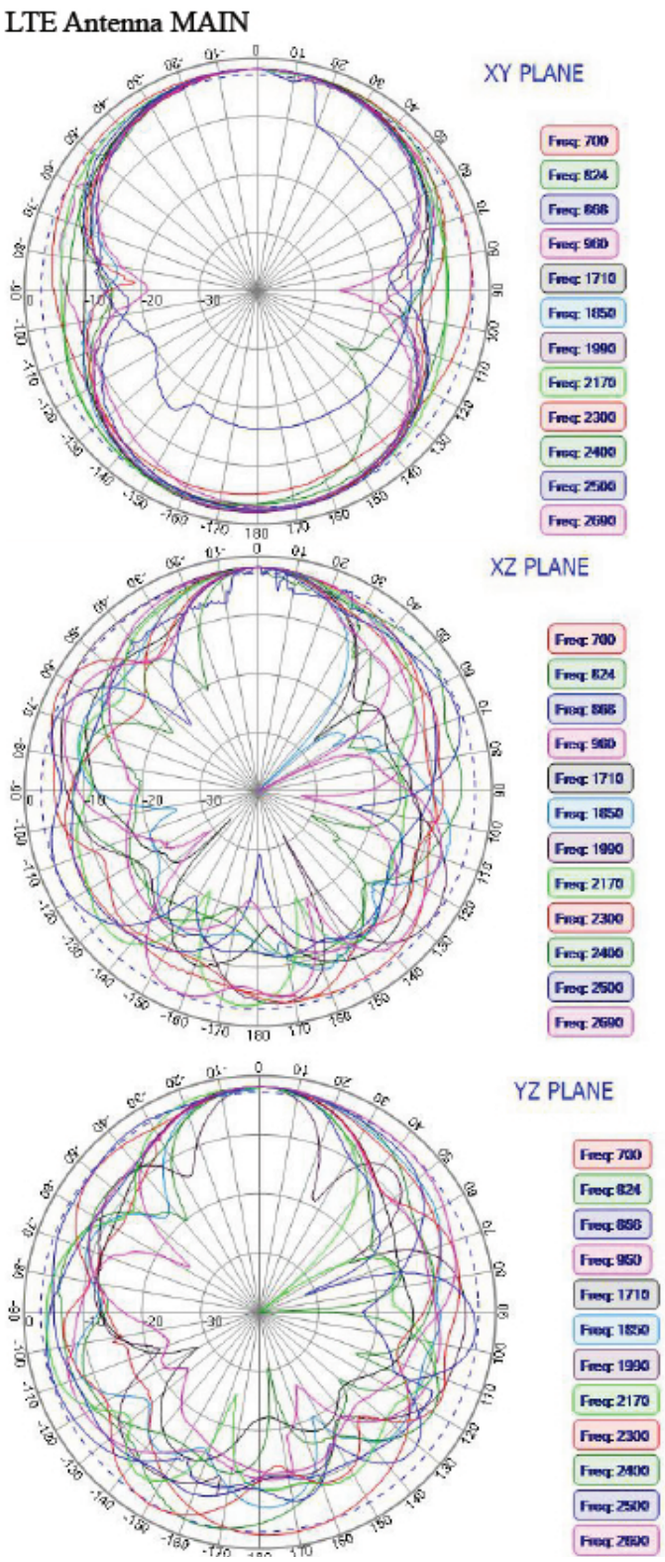

LTE MIMO Combination Antenna

90-ANT-7055

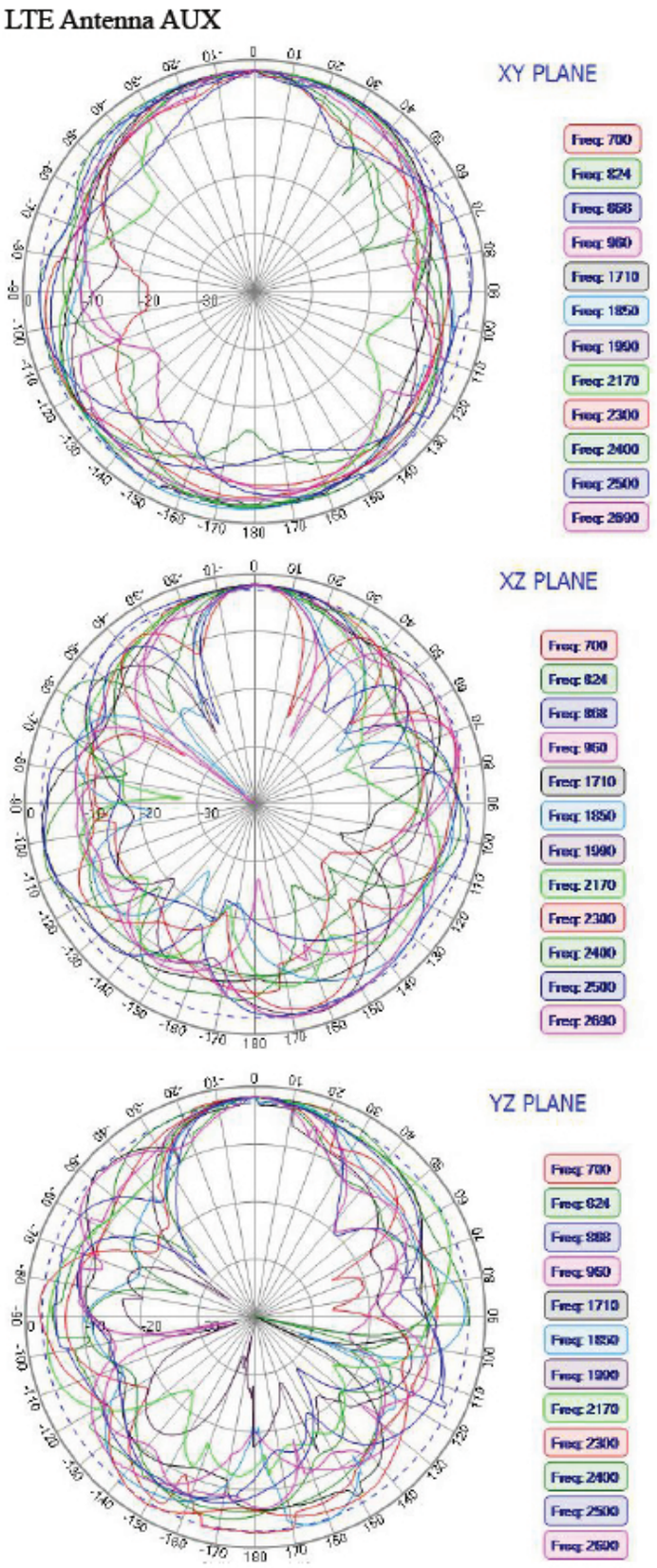

DMTonline ApS
Kjeldgårdsvej 1 • DK-9300 Sæby
Telefon +45 9846 1333 • Fax +45 9846 7877
www. dmtonline.dk • info@dmtonline.dk