# High Precision GNSS Surveying antenna
# 90-ANT-7081



## DIMENSIONS

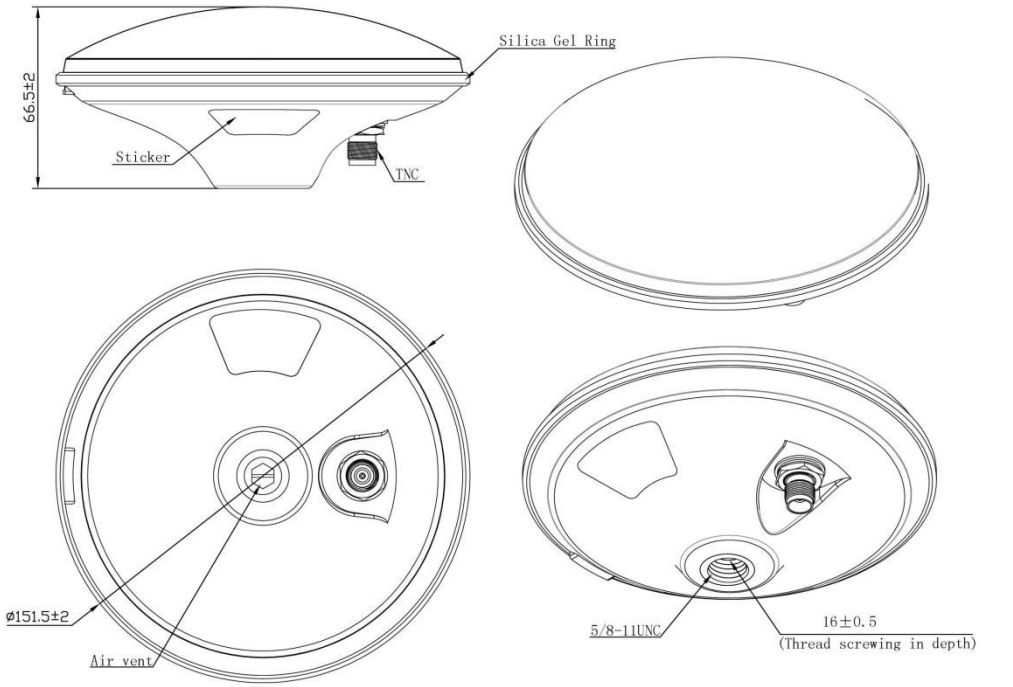


Unit:mm

# SPECIFICATIONS

| Item | | Specifications |
|---|---|---|
| Antenna | Frequency | GPS L1/L2/L5/L-Band<br>GLONASS G1/G2/G3<br>COMPASS B1/B2/B3<br>Galileo E1/L1/E2/E5a/E5b/E6 |
| | Polarization | RHCP |
| | Axial Ratio | ≤3dB |
| | V.S.W.R | ≤1.5 |
| | Peak Gain | ≥5.5dBi |
| | Impedance | 50Ω |
| | Phase Center Error | ±2mm |
| | Horizontal coverage angle | 360° |
| LNA | Gain | 40±2dB |
| | Noise Figure | ≤1.5dB |
| | Passband fluctuation | ±1dB |
| | Supply Voltage | 3~12V DC |
| | Current Consumption | ≤50mA |
| | V.S.W.R | ≤2.0 |
| Mechanical | Connector | TNC-K |
| | Radome Material | ABS |
| | Mounting Method | Screw |
| Environmental | Operating Temperature | -40℃~+85℃ |
| | Relative Humidity | Up to 95% |
| | Ingress Protection | IP67 (exclude Air vent in screw hole) |
| | Environmentally Friendly | ROHS Compliant |

## Antenna Reference Point&Phase Center

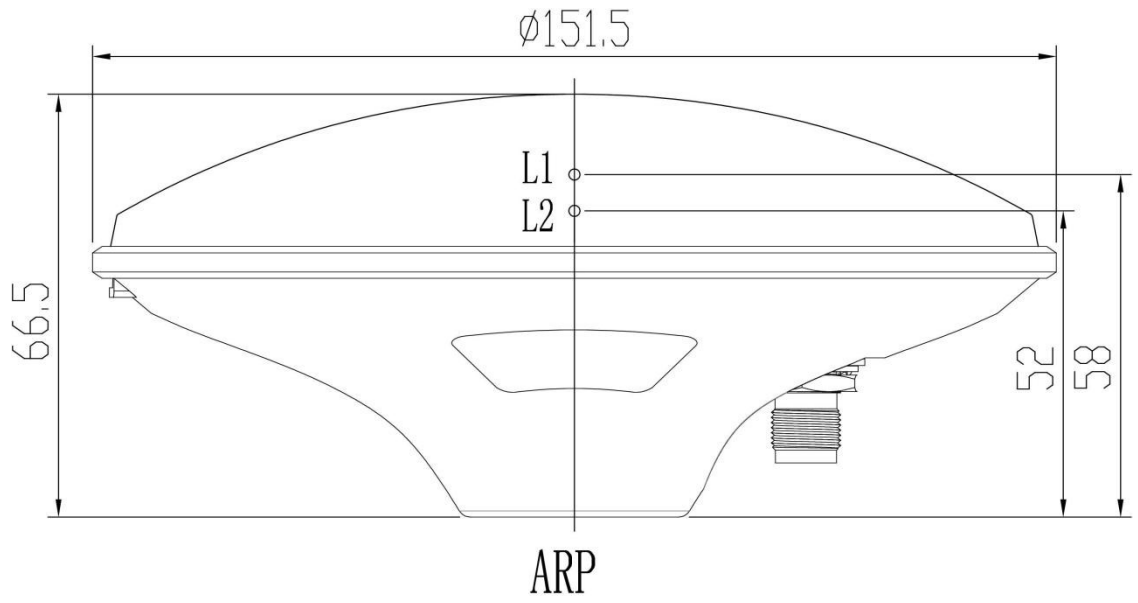


Mechanical Offsets Units in “mm”