0 dBd Omnidirectional Base Station and Marine Antenna for the 2400 MHz Band



DESCRIPTION

- Vertically polarized, omnidirectional base station and marine antenna.
- Provided with the sturdy “LW” mast mount – a lightweight, multipurpose, epoxy-coated mounting bracket made of non-corrosive aluminium.
- The accompanying U-bolts and fittings are made of stainless steel.
- To be mounted on vertical or horizontal mast tubes, 16 to 54 mm in outer diameter.
- The cable can be led either on the outside or along the inside of the mast tube.
- Large bandwidth with respect to both SWR and gain.
- Highly suitable for duplex operation with large spacing between the TX and the RX frequencies.
- The antenna element is sealed in a high-quality, conical glass fibre tube.
- The CXL 2400-1LW/... is a vibration-proof, lightweight, slim-line, corrosion resistant, modern style base station and marine antenna.

SPECIFICATIONS

Electrical	
Model	CXL 2400-1LW/...
Frequency	Models within 2300 - 2700 MHz
Antenna Type	Collinear, broad-band
3 dB Beamwidth, H-Plane	Omnidirectional
Polarisation	Vertical
3 dB Beamwidth, E-Plane	80 °
Impedance	50 Ω
Gain	0 dBd (2.2 dBi)
Maximum Input Power	100 W
HCM Code(s)	

Mechanical	
Wind Area	0.02 sq. m / 0.22 sq. ft
Connection(s)	N(f)
Materials	Shroud: Polyurethane-coated glass fibre Mounting bracket: Seawater resistant aluminium, epoxy-coated Clamps: Stainless steel
Colour	White (RAL 9003)
Height	400 mm / 15.75 in.
Wind Load	26 N (160km/h)
Dia. At Top End	14 mm / 0.55 in.
Weight	0.4 kg / 0.88 lb
Dia. At Bottom End	16 mm / 0.63 in.
Mounting	On 16 to 54 mm dia. mast tube

Environmental	
Operating Temperature Range	-30°C to +70°C

ORDERING

Type	Product No.	Frequency
CXL 2400-1LW/l	100000196	2300 - 2500 MHz
CXL 2400-1LW/m	100000195	2400 - 2600 MHz
CXL 2400-1LW/h	100000422	2500 - 2700 MHz

DIAGRAM

TYPICAL GAIN AND SWR CURVES

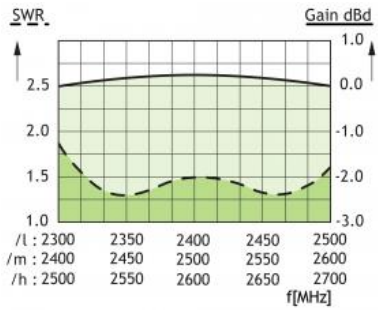

TYPICAL RADIATION PATTERN (E-PLANE)

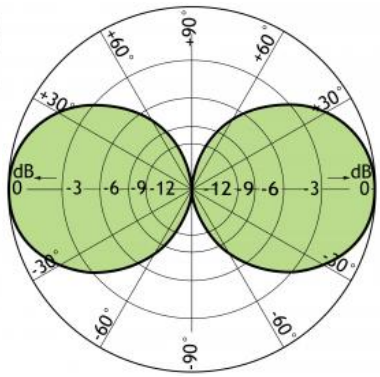

TYPICAL RADIATION PATTERN (H-PLANE)

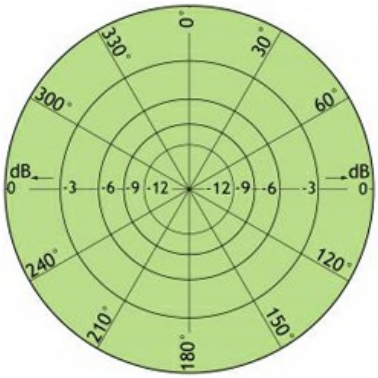

MULTI-PURPOSE MOUNTING BRACKET

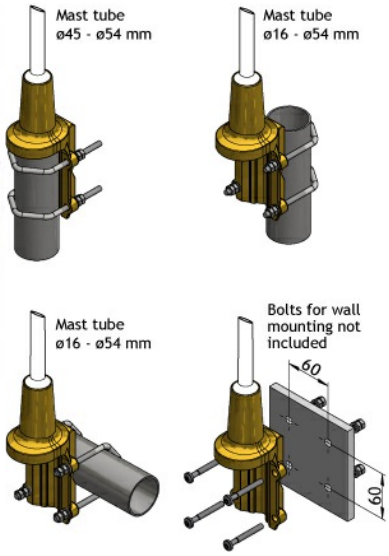

PLEASE NOTE_x000d_The antenna is delivered with a DC-connection between the antenna element and the mounting bracket.